Work Order ID 145779

Friday, May 06, 2016 10:49:40 AM

145779

Item ID: D412-702-303 **Accept** *N900040100* **Setup Start** *NS1*

Revision ID: **Stop** *NS2*

Item Name: Harness Assembly

Start Date: 5/5/2016 **Start Qty:** 4.00 *4* **Cust Item ID:**

Required Date: 5/10/2016 **Req'd Qty:** 4.00 *4* **Customer:**

Reference:

Run Start *NR1*

Approvals: **Process Plan:** MJS **Date:** MAY 0 9 2016 **Tooling:** _____ **Date:** _____ **Stop** *NR2*

QC: _____ **Date:** _____ **SPC (Y/N):** _____ **Date:** _____

Sequence ID/ Work Center ID	Operation Description	Set Up/ Run Hours	Tool ID	Tool #	Plan Code	Accept Qty	Reject Qty	Reject Number	Insp. Stamp
Draw Nbr / **Revision Nbr**									
DSI 9511 / A									
100		0.00							
100 Small Fab	**Memo**	0.76				4X			16/05/11 DAS 36 9-89
Small Fab	Assemble as per dwg ICA D412-702 p.49								
110	QC5- Inspect part completeness to step on W/O	0.00							
110 QC	**Memo**	0.08				4			DAS 38 9-89 MAY 1 2 2016
Quality Control									
120		0.00							
120 Packaging	**Memo**	0.00							MAY 1 2 2016
Packaging	Identify with P/N & CHG# and pack for shipping as per PPP D412-702-303 CHG001 Location: St 468 PPP Rev: _____					DAS 8 9-89			

DART AEROSPACE

DQA: _____ Date: _____

WORK ORDER NON-CONFORMANCE / UPDATE

QA Closed: Date:

Work Order update only ☐

Work Order: _____ Part No. _____ NCR No.	**DISPOSITION** Rework ☐ Scrap ☐ Use-as-is ☐ Suspected Unapproved ☐	**AGAINST DEPARTMENT/PROCESS** Skid-tube ☐ Cross tube ☐ Water Jet ☐ Engineering ☐ Machining ☐ Small Fab ☐ Prod. Eng. Coor. ☐ Quality ☐ Thermoforming ☐ Finishing ☐ Rec/Store/Packaging ☐ Other ☐ Large Fab ☐ Composite ☐ Supplier ☐

Date :	Step #:	QTY Effective :	**MRB (QSI042) Approval**

Description Work Order Deviation	**Disposition**	
		Completed By
		Lead hand / Supervisor Approval Verification
		QC / QA Coordinator Approval

Root Cause				**FAULT CATEGORY**			
Environment	☐	☐	No Re-verification	☐ Pressure/Forced	☐ Temperature/Cure	☐ Power Loss/Surge	☐ Positioned Wrong
Design	☐	☐	Operator	☐ Bending	☐ Set-up	☐ Folio/Program	☐ Outside Dimensions
Doc/Data	☐	☐	Offset/Setup	☐ Centre Not Concentric	☐ BOM/Route	☐ Grain	☐ Over/Under tolerance
Equip/Tooling	☐	☐	Supplier	☐ Cracks	☐ Broken/Damage/Defect	☐ Weld	☐ Part Incorrect
Handling/Pre	☐	☐	Training	☐ Crimp/Kink/Ripple/Wave	☐ Inspection Incomplete/Unqualified	☐ Wrong Stock Pulled	☐ Part Lost/Missing
Material	☐	☐	Use for Testing	☐ Cuffs	☐ Contamination	☐ Out of Sequence	☐ Part Moved
Internal Transport	☐	☐	Poor Information	☐ Crushing	☐ Countersink	☐ Off-set	☐ Drawing
Tribal Knowledge	☐	☐	Rushing	☐ Heat Treat	☐ Cut Too Short	☐ Mislabeled	☐ Finish
LOA	☐	☐	Product Improvement	☐ Wave/Twist in Tube	☐ Instructions Incomplete/Unclear	☐ Fit/Function	☐ Misread
Substation	☐	☐	Process Improvement	☐ Marks/Chatter	☐ Drill Holes	☐ Misaligned/off center	☐ Turning Sequence
Past Expiry Date	☐	☐	Manufacturing Process				
Misidentified	☐	☐	Past Due	☐ OTHER :			

Work Order ID 145779

Friday, May 06, 2016 10:49:40 AM

145779

Item ID: D412-702-303

Revision ID:

Item Name: Harness Assembly

Start Date: 5/5/2016 **Start Qty:** 4.00 *4*

Required Date: 5/10/2016 **Req'd Qty:** 4.00 *4*

Reference:

Accept *N900040100*

Setup Start *NS1*

Stop *NS2*

Cust Item ID:

Customer:

Run Start *NR1*

Stop *NR2*

Approvals: **Process Plan:** _____ **Date:** _____ **Tooling:** _____ **Date:** _____

QC: _____ **Date:** _____ **SPC (Y/N):** _____ **Date:** _____

Sequence ID/ Work Center ID	Operation Description	Set Up/ Run Hours	Tool ID	Tool #	Plan Code	Accept Qty	Reject Qty	Reject Number	Insp. Stamp
130	QC21- Final Inspection - Work Order Release	0.00							
130 QC Quality Control	Memo	0.40				MCJ		MAY 1 3 2016	

MCJ MAY 1 3 2016

DART AEROSPACE

DQA: _____ Date: _____

WORK ORDER NON-CONFORMANCE / UPDATE

QA Closed: Date:

Work Order update only ☐

Work Order: _____ Part No. _____ NCR No.	**DISPOSITION** Rework ☐ Scrap ☐ Use-as-is ☐ Suspected Unapproved ☐	**AGAINST DEPARTMENT/PROCESS** Skid-tube ☐ Cross tube ☐ Water Jet ☐ Engineering ☐ Machining ☐ Small Fab ☐ Prod. Eng. Coor. ☐ Quality ☐ Thermoforming ☐ Finishing ☐ Rec/Store/Packaging ☐ Other ☐ Large Fab ☐ Composite ☐ Supplier ☐

Date :	Step #:	QTY Effective :	MRB (QSI042) Approval

Description Work Order Deviation	Disposition	
		Completed By
		Lead hand / Supervisor Approval Verification
		QC / QA Coordinator Approval

Root Cause				FAULT CATEGORY			
Environment	☐	☐	No Re-verification	☐ Pressure/Forced	☐ Temperature/Cure	☐ Power Loss/Surge	☐ Positioned Wrong
Design	☐	☐	Operator	☐ Bending	☐ Set-up	☐ Folio/Program	☐ Outside Dimensions
Doc/Data	☐	☐	Offset/Setup	☐ Centre Not Concentric	☐ BOM/Route	☐ Grain	☐ Over/Under tolerance
Equip/Tooling	☐	☐	Supplier	☐ Cracks	☐ Broken/Damage/Defect	☐ Weld	☐ Part Incorrect
Handling/Pre	☐	☐	Training	☐ Crimp/Kink/Ripple/Wave	☐ Inspection Incomplete/Unqualified	☐ Wrong Stock Pulled	☐ Part Lost/Missing
Material	☐	☐	Use for Testing	☐ Cuffs	☐ Contamination	☐ Out of Sequence	☐ Part Moved
Internal Transport	☐	☐	Poor Information	☐ Crushing	☐ Countersink	☐ Off-set	☐ Drawing
Tribal Knowledge	☐	☐	Rushing	☐ Heat Treat	☐ Cut Too Short	☐ Mislabeled	☐ Finish
LOA	☐	☐	Product Improvement	☐ Wave/Twist in Tube	☐ Instructions Incomplete/Unclear	☐ Fit/Function	☐ Misread
Substation	☐	☐	Process Improvement	☐ Marks/Chatter	☐ Drill Holes	☐ Misaligned/off center	☐ Turning Sequence
Past Expiry Date	☐	☐	Manufacturing Process				
Misidentified	☐	☐	Past Due	☐ OTHER :			

Picklist Print

Friday, May 06, 2016 10:49:40 AM

Work Order ID: 145779

145779

Parent Item: D412-702-303

D412-702-303

Parent Item Name: Harness Assembly

Start Date: 5/5/2016 **Required Date:** 5/10/2016

Start Qty: 4.00 **Required Qty:** 4.00

Comments: IPP Rev:A new issue DD 10.04.30 verified:EC

Component Item ID/ Item Name	Replacement Item ID	Mfg/ Purch	Bin Item	Primary Location	Last Location	Route Seq ID	Unit of Measure	Qty on Hand	Qty per Kit	Total Qty	Qty Issued	Date Issued	Status
D3573-8 *D3573-8* Adapter		Manufactured	No			100	Each	8.0000	1 **	4		16/05/10	DAS 36 9-89
				Location		**Loc Qty**		**Loc Code**					
				GA		8							
					131715	2							
					137099	6				4			
D4088-041 *D4088-041* Shoulder Harness		Manufactured	No			100	Each	25.0000	1 **	4		16/05/10	DAS 36 9-89
				Location		**Loc Qty**		**Loc Code**					
				ST466		13						B131786 (1x)	
					132510	9							
					141470	4				2			
				ST470		12							
					142556	8				1			
					143796	4							
MS24693-S272 *MS24693-S272* SCREW		Purchased	No			100	Each	92.0000	4 **	16		16/05/10	DAS 36 9-89
				Location		**Loc Qty**		**Loc Code**					
				CA		41							
					M129682	41							
				GA		3						M134738 (16x)	
					M126190	3							
				ST286		48							
					M130799	48							

DART AEROSPACE

DQA: _____ Date: _____

WORK ORDER NON-CONFORMANCE / UPDATE

QA Closed: Date:

Work Order update only ☐

Work Order: _____ Part No. _____ NCR No.	**DISPOSITION** Rework ☐ Scrap ☐ Use-as-is ☐ Suspected Unapproved ☐	**AGAINST DEPARTMENT/PROCESS** Skid-tube ☐ Cross tube ☐ Water Jet ☐ Engineering ☐ Machining ☐ Small Fab ☐ Prod. Eng. Coor. ☐ Quality ☐ Thermoforming ☐ Finishing ☐ Rec/Store/Packaging ☐ Other ☐ Large Fab ☐ Composite ☐ Supplier ☐

Date :	Step #:	QTY Effective :	MRB (QSI042) Approval

Description Work Order Deviation	Disposition	
		Completed By
		Lead hand / Supervisor Approval Verification
		QC / QA Coordinator Approval

Root Cause				FAULT CATEGORY			
Environment	☐	☐	No Re-verification	☐ Pressure/Forced	☐ Temperature/Cure	☐ Power Loss/Surge	☐ Positioned Wrong
Design	☐	☐	Operator	☐ Bending	☐ Set-up	☐ Folio/Program	☐ Outside Dimensions
Doc/Data	☐	☐	Offset/Setup	☐ Centre Not Concentric	☐ BOM/Route	☐ Grain	☐ Over/Under tolerance
Equip/Tooling	☐	☐	Supplier	☐ Cracks	☐ Broken/Damage/Defect	☐ Weld	☐ Part Incorrect
Handling/Pre	☐	☐	Training	☐ Crimp/Kink/Ripple/Wave	☐ Inspection Incomplete/Unqualified	☐ Wrong Stock Pulled	☐ Part Lost/Missing
Material	☐	☐	Use for Testing	☐ Cuffs	☐ Contamination	☐ Out of Sequence	☐ Part Moved
Internal Transport	☐	☐	Poor Information	☐ Crushing	☐ Countersink	☐ Off-set	☐ Drawing
Tribal Knowledge	☐	☐	Rushing	☐ Heat Treat	☐ Cut Too Short	☐ Mislabeled	☐ Finish
LOA	☐	☐	Product Improvement	☐ Wave/Twist in Tube	☐ Instructions Incomplete/Unclear	☐ Fit/Function	☐ Misread
Substation	☐	☐	Process Improvement	☐ Marks/Chatter	☐ Drill Holes	☐ Misaligned/off center	☐ Turning Sequence
Past Expiry Date	☐	☐	Manufacturing Process				
Misidentified	☐	☐	Past Due	☐ OTHER :			

Picklist Print

Friday, May 06, 2016 10:49:40 AM

Work Order ID: 145779

Parent Item: D412-702-303

Parent Item Name: Harness Assembly

145779

D412-702-303

Start Date: 5/5/2016 **Required Date:** 5/10/2016

Start Qty: 4.00 **Required Qty:** 4.00

NAS1149D0316J Purchased No 100 Each 2,003.000 4 16

NAS1149D0316J

Washer

**

16/05/11 DAS 36 9-89

Location		Loc Qty	Loc Code	
GA		52		
	M132677	52		10
ST264		1951		
	M134502	1951		6

MS21042L3 Purchased No 100 Each 1,726.000 4 16

MS21042L3

Nut

**

16/05/11 DAS 36 9-89

Location		Loc Qty	Loc Code	
FP001		100		
	m133790	100		
GA		701		
	m133790	3		
	m134360	698		16
ST303		925		
	m134039	12		
	m134360	313		
	m134634	600		

DART AEROSPACE

DQA: _____ Date: _____

WORK ORDER NON-CONFORMANCE / UPDATE

QA Closed: Date:

Work Order update only ☐

Work Order: _____ Part No. _____ NCR No.	**DISPOSITION** Rework ☐ Scrap ☐ Use-as-is ☐ Suspected Unapproved ☐	**AGAINST DEPARTMENT/PROCESS** Skid-tube ☐ Cross tube ☐ Water Jet ☐ Engineering ☐ Machining ☐ Small Fab ☐ Prod. Eng. Coor. ☐ Quality ☐ Thermoforming ☐ Finishing ☐ Rec/Store/Packaging ☐ Other ☐ Large Fab ☐ Composite ☐ Supplier ☐

Date :	Step #:	QTY Effective :	**MRB (QSI042) Approval**

Description Work Order Deviation	**Disposition**	
		Completed By
		Lead hand / Supervisor Approval Verification
		QC / QA Coordinator Approval

Root Cause

Environment	☐	☐	No Re-verification
Design	☐	☐	Operator
Doc/Data	☐	☐	Offset/Setup
Equip/Tooling	☐	☐	Supplier
Handling/Pre	☐	☐	Training
Material	☐	☐	Use for Testing
Internal Transport	☐	☐	Poor Information
Tribal Knowledge	☐	☐	Rushing
LOA	☐	☐	Product Improvement
Substation	☐	☐	Process Improvement
Past Expiry Date	☐	☐	Manufacturing Process
Misidentified	☐	☐	Past Due

FAULT CATEGORY

☐ Pressure/Forced	☐ Temperature/Cure	☐ Power Loss/Surge	☐ Positioned Wrong
☐ Bending	☐ Set-up	☐ Folio/Program	☐ Outside Dimensions
☐ Centre Not Concentric	☐ BOM/Route	☐ Grain	☐ Over/Under tolerance
☐ Cracks	☐ Broken/Damage/Defect	☐ Weld	☐ Part Incorrect
☐ Crimp/Kink/Ripple/Wave	☐ Inspection Incomplete/Unqualified	☐ Wrong Stock Pulled	☐ Part Lost/Missing
☐ Cuffs	☐ Contamination	☐ Out of Sequence	☐ Part Moved
☐ Crushing	☐ Countersink	☐ Off-set	☐ Drawing
☐ Heat Treat	☐ Cut Too Short	☐ Mislabeled	☐ Finish
☐ Wave/Twist in Tube	☐ Instructions Incomplete/Unclear	☐ Fit/Function	☐ Misread
☐ Marks/Chatter	☐ Drill Holes	☐ Misaligned/off center	☐ Turning Sequence

☐ OTHER :

DART SERVICE INSTRUCTION

TO AMEND INSTALLATION INSTRUCTIONS IIN-D412-702 REV. E AND INSTRUCTIONS FOR CONTINUED AIRWORTHINESS ICA-D412-702 REV. 3
REF TCCA STC SH04-7
REF FAA STC SR01997NY
REF EASA STC EASA.I.M.R.S.00710

This service instruction adds several kits equipped with improved inertia reels:

The Dart **D412-702-341** 13-Man Shoulder Harness Kit provides 3-point harnesses with inertia reels and joined lap and shoulder belts for all 13 passenger seating positions in the aircraft cabin. The kit also contains hardpoints for securing the harnesses. The harnesses for this kit meet the requirements of TSO-C114 and replace the existing lap belts. This kit should be installed similar to the D412-702-041B kit, as detailed in Table 1 of this service instruction.

The Dart **D412-702-343** 5-Man Forward Facing Shoulder Harness Kit provides 3-point harnesses with inertia reels and joined lap and shoulder belts for the 5 forward facing seating positions in the aircraft cabin. The kit also contains hardpoints for securing the harnesses. The harnesses for this kit meet the requirements of TSO-C114 and replace the existing lap belts. This kit should be installed similar to the D412-702-043B kit, as detailed in Table 1 of this service instruction.

The Dart **D412-702-345** 4-Man Shoulder Harness Kit provides 3-point harnesses with inertia reels and joined lap and shoulder belts for the 4 aft facing seating positions in the aircraft cabin. The kit also contains hardpoints for securing the harnesses. The harnesses for this kit meet the requirements of TSO-C114 and replace the existing lap belts. This kit should be installed similar to the D412-702-045B kit, as detailed in Table 1 of this service instruction.

The Dart **D412-702-347** 4-Man Shoulder Harness Kit provides 3-point harnesses with inertia reels and joined lap and shoulder belts for the 4 side facing seating positions in the aircraft cabin. The kit also contains hardpoints for securing the harnesses. The harnesses for this kit meet the requirements of TSO-C114 and replace the existing lap belts. This kit should be installed similar to the D412-702-047B kit, as detailed in Table 1 of this service instruction.

The Dart **D412-702-349** 1-Man Shoulder Harness Kit provides a 3-point harness with an inertia reel and joined lap and shoulder belts for the center forward facing seating position in the aircraft cabin. The kit also contains hardpoints for securing the harness. The harness for this kit meets the requirements of TSO-C114 and replaces the existing lap belts. This kit should be installed similar to the D412-702-049B kit, as detailed in Table 1 of this service instruction.

The Dart **D412-702-351** 1-man 3-point shoulder harness kits are available for the outboard seats of the 5-man forward facing bench in Bell 205/212/214/412 model aircraft. The kit can be installed LH or RH. These kits should be installed similar to the D412-702-051B/-052B kits, as detailed in Table 1 of this service instruction.

The Dart **D214-702-337** 5-Man Aft Facing Shoulder Harness Kit provides 3-point harnesses with inertial reels and joined lap and shoulder belts for the 5-man aft facing seat installed in the Bell 214B/B1 model aircraft. This kit should be installed similar to the D214-702-037B kit, as detailed in Table 1 of this service instruction.

The Dart **D205-702-353** 4-Man Aft Facing Shoulder Harness Kit provides 3-point harnesses with inertial reels and joined lap and shoulder harnesses for the 4-man aft facing seat installed in the UH-1 model aircraft. This kit should be installed similar to the D205-702-053B kit, as detailed in Table 1 of this service instruction.

CANADA
DEPARTMENT OF TRANSPORT
AIRCRAFT CERTIFICATION
BRANCH
DAO # 01-O-01

APPROVED
BY: _____
D. SHEPHERD (DE # 02)
DATE: 10.03.22
CERT. NO.: SH04-7
ISSUE NO.: 3

REV.	DESCRIPTION	BY	DATE
A	NEW ISSUE	CP	10.03.18

DESIGN		**DART AEROSPACE LTD** HAWKESBURY, ONTARIO, CANADA	
DRAWN			
CHECKED		DRAWING NO.	REV. A
MFG. APPR.	N/A	DSI 9511	SHEET 1 OF 6
APPROVED		TITLE	SCALE
DE APPR.		NEW SHOULDER HARNESS KITS	NTS
DATE	10.03.18		

COPYRIGHT © 2010 BY DART AEROSPACE LTD
THIS DOCUMENT IS PRIVATE AND CONFIDENTIAL AND IS SUPPLIED ON THE EXPRESS CONDITION THAT IT IS NOT TO BE USED FOR ANY PURPOSE OR COPIED OR COMMUNICATED TO ANY OTHER PERSON WITHOUT WRITTEN PERMISSION FROM DART AEROSPACE LTD.

INSTALLATION

The Dart D412-702-3XX kits should be installed similar to the kits in Installation Instructions IIN-D412-702 Rev. E or Dart Service Instruction (DSI) listed below:

TABLE 1

Part Number	Description	Install similar to:
D412-702-341	Shoulder Harness Kit	D412-702-041B (IIN-D412-702, DSI 9408)
D412-702-343	Shoulder Harness Kit	D412-702-043B (IIN-D412-702, DSI 9453 [214], DSI 9408)
D412-702-345	Shoulder Harness Kit	D412-702-045B (IIN-D412-702, DSI 9469)
D412-702-347	Shoulder Harness Kit	D412-702-047B (IIN-D412-702, DSI 9408)
D412-702-349	Shoulder Harness Kit	D412-702-049B (IIN-D412-702, DSI 9408)
D412-702-351	Shoulder Harness Kit	D412-702-051B (LH) (DSI 9397, DSI 9408) D412-702-052B (RH) (DSI 9397, DSI 9408)
D214-702-337	Shoulder Harness Kit	D214-702-037B (DSI 9454)
D205-702-353	Shoulder Harness Kit	D205-702-053B (DSI 9460)
D412-702-301	Harness Assembly	D412-702-101B (IIN-D412-702)
D412-702-303	Harness Assembly	D412-702-103B (IIN-D412-702)
D412-702-305	Harness Assembly	D412-702-105B (IIN-D412-702)
D412-702-307	Harness Assembly	D412-702-107B (IIN-D412-702)
D412-702-309	Harness Assembly	D412-702-109B (IIN-D412-702)
D412-702-311	Harness Assembly	D412-702-111B (IIN-D412-702)
D412-702-313	Harness Assembly	D412-702-113B (IIN-D412-702)
D412-702-315	Harness Assembly	D412-702-115B (IIN-D412-702)
D412-702-317	Harness Assembly	D412-702-117B (IIN-D412-702)
D412-702-319	Harness Assembly	D412-702-119B (DSI 9454)
D412-702-321	Harness Assembly	D412-702-121B (DSI 9454, DSI 9469)
D412-702-323	Harness Assembly	D412-702-123B (DSI 9454, DSI 9469)

CANADA
DEPARTMENT OF TRANSPORT
AIRCRAFT CERTIFICATION
BRANCH
DAO # 01-O-01

APPROVED

BY: _____
D. SHEPHERD (DE # 02)

DATE: 10.03.22
CERT. NO.: SH04-7
ISSUE NO.: 3

DESIGN		**DART AEROSPACE LTD** HAWKESBURY, ONTARIO, CANADA
DRAWN		
CHECKED		DRAWING NO. REV. A
MFG. APPR.	N/A	DSI 9511 SHEET 2 OF 6
APPROVED		TITLE SCALE
DE APPR.		NEW SHOULDER HARNESS KITS NTS
DATE	10.03.18	

COPYRIGHT ©2010 BY DART AEROSPACE LTD
THIS DOCUMENT IS PRIVATE AND CONFIDENTIAL AND IS SUPPLIED ON THE EXPRESS CONDITION THAT IT IS NOT TO BE USED FOR ANY PURPOSE OR COPIED OR COMMUNICATED TO ANY OTHER PERSON WITHOUT WRITTEN PERMISSION FROM DART AEROSPACE LTD.

PARTS LIST

TABLE 2

QTY -341	QTY -343	QTY -345	QTY -347	QTY -349	QTY -351	Part Number	Description
X						D412-702-341	Dart 13-Man 3-Point Shoulder Harness Kit
	X					D412-702-343	Dart 5-Man 3-Point Forward Facing Shoulder Harness Kit
		X				D412-702-345	Dart 4-Man 3-Point Aft Facing Shoulder Harness Kit
			X			D412-702-347	Dart 4-Man 3-Point Side Facing Shoulder Harness Kit
				X		D412-702-349	Dart 1-Man 3-Point Forward Shoulder Harness Kit
					X	D412-702-351	Dart 1-Man 3-Point Shoulder Harness Kit
1	1		1	1		D412-702-059	GROMMET KIT
9	5		4	1	1	D3761-1-041	HOOK AND LOOP STRIP (DSI 9408)
2	1		1			D412-702-301	HARNESS ASSEMBLY (NEW)
1*	1*		1*			D3573-7	ADAPTER
1*	1*		1*			D4088-041	SHOULDER HARNESS (NEW)
4*	4*		4*			MS24693S272	SCREW
4*	4*		4*			AN960JD10LL	WASHER
4*	4*		4*			MS21042L3	NUT
2	1		1			D412-702-303	HARNESS ASSEMBLY (NEW)
1*	1*		1*			D3573-8	ADAPTER
1*	1*		1*			D4088-041	SHOULDER HARNESS (NEW)
4*	4*		4*			MS24693S272	SCREW
4*	4*		4*			AN960JD10LL	WASHER
4*	4*		4*			MS21042L3	NUT
1	1			1		D412-702-305	HARNESS ASSEMBLY (NEW)
1*	1*			1*		D3573-1	ADAPTER
1*	1*			1*		D4088-041	SHOULDER HARNESS (NEW)
4*	4*			4*		MS24693S273	SCREW
4*	4*			4*		AN960JD10LL	WASHER
4*	4*			4*		MS21042L3	NUT
1	1				1	D412-702-307	HARNESS ASSEMBLY (NEW)
1*	1*				1*	D3573-3	ADAPTER
1*	1*				1*	D4088-041	SHOULDER HARNESS (NEW)
4*	4*				4*	MS24693S272	SCREW
4*	4*				4*	AN960JD10LL	WASHER
4*	4*				4*	MS21042L3	NUT
1	1					D412-702-309	HARNESS ASSEMBLY (NEW)
1*	1*					D3573-3	ADAPTER
1*	1*					D4088-041	SHOULDER HARNESS (NEW)
4*	4*					MS24693S272	SCREW
4*	4*					AN960JD10LL	WASHER
4*	4*					MS21042L3	NUT

* denotes that part is included in assembly above

continued next page…

CANADA
DEPARTMENT OF TRANSPORT
AIRCRAFT CERTIFICATION
BRANCH
DAO # 01-O-01

APPROVED

BY: _____
D. SHEPHERD (DE # 02)

DATE: 10.03.22
CERT. NO.: SH04-7
ISSUE NO.: 3

DESIGN		**DART AEROSPACE LTD** HAWKESBURY, ONTARIO, CANADA
DRAWN		
CHECKED		DRAWING NO. REV. A
MFG. APPR.	N/A	DSI 9511 SHEET 3 OF 6
APPROVED		TITLE SCALE
DE APPR.		NEW SHOULDER HARNESS KITS NTS
DATE	10.03.18	

COPYRIGHT © 2010 BY DART AEROSPACE LTD
THIS DOCUMENT IS PRIVATE AND CONFIDENTIAL AND IS SUPPLIED ON THE EXPRESS CONDITION THAT IT IS NOT TO BE USED FOR ANY PURPOSE OR COPIED OR COMMUNICATED TO ANY OTHER PERSON WITHOUT WRITTEN PERMISSION FROM DART AEROSPACE LTD.

...continued from previous page

QTY -341	QTY -343	QTY -345	QTY -347	QTY -349	QTY -351	Part Number	Description
1		1				D412-702-311	HARNESS ASSEMBLY (NEW)
1*		1*				D3570-1	BRACKET
1*		1*				D4088-043	SHOULDER HARNESS (NEW)
4*		4*				MS24694S50	SCREW
4*		4*				AN960JD10L	WASHER
4*		4*				MS21042L3	NUT
1		1				D412-702-313	HARNESS ASSEMBLY (NEW)
1*		1*				D3570-2	BRACKET
1*		1*				D4088-043	SHOULDER HARNESS (NEW)
4*		4*				MS24694S50	SCREW
4*		4*				AN960JD10L	WASHER
4*		4*				MS21042L3	NUT
1			1			D412-702-315	HARNESS ASSEMBLY (NEW)
1*			1*			D3573-5	ADAPTER
1*			1*			D4088-041	SHOULDER HARNESS (NEW)
4*			4*			MS24693S272	SCREW
4*			4*			AN960JD10LL	WASHER
4*			4*			MS21042L3	NUT
1			1			D412-702-317	HARNESS ASSEMBLY (NEW)
1*			1*			D3573-5	ADAPTER
1*			1*			D4088-041	SHOULDER HARNESS (NEW)
4*			4*			MS24693S272	SCREW
4*			4*			AN960JD10LL	WASHER
4*			4*			MS21042L3	NUT
1		1				D412-702-321	HARNESS ASSEMBLY (NEW)
1*		1*				D3570-3	BRACKET
1*		1*				D4088-043	SHOULDER HARNESS (NEW)
4*		4*				MS24694S50	BOLT
4*		4*				AN960JD10L	WASHER
4*		4*				MS21042L3	NUT
1		1				D412-702-323	HARNESS ASSEMBLY (NEW)
1*		1*				D3570-4	BRACKET
1*		1*				D4088-043	SHOULDER HARNESS (NEW)
4*		4*				MS24694S50	BOLT
4*		4*				AN960JD10L	WASHER
4*		4*				MS21042L3	NUT

* denotes that part is included in assembly above

continued next page...

CANADA
DEPARTMENT OF TRANSPORT
AIRCRAFT CERTIFICATION
BRANCH
DAO # 01-O-01

APPROVED

BY: _____
D. SHEPHERD (DE # 02)

DATE: 10.03.22
CERT. NO.: SH04-7
ISSUE NO.: 3

DESIGN	
DRAWN	
CHECKED	
MFG. APPR.	N/A
APPROVED	
DE APPR.	
DATE	10.03.18

DART AEROSPACE LTD
HAWKESBURY, ONTARIO, CANADA

DRAWING NO. DSI 9511 — REV. A — SHEET 4 OF 6

TITLE: NEW SHOULDER HARNESS KITS — SCALE: NTS

COPYRIGHT © 2010 BY DART AEROSPACE LTD
THIS DOCUMENT IS PRIVATE AND CONFIDENTIAL AND IS SUPPLIED ON THE EXPRESS CONDITION THAT IT IS NOT TO BE USED FOR ANY PURPOSE OR COPIED OR COMMUNICATED TO ANY OTHER PERSON WITHOUT WRITTEN PERMISSION FROM DART AEROSPACE LTD.

...continued from previous page

QTY -341	QTY -343	QTY -345	QTY -347	QTY -349	QTY -351	Part Number	Description
2	2					D3542-1	BRACKET
7	3		4	1		D3571-1	GUIDE
2	2					D3571-3	GUIDE
2		2				D3572-041	GUIDE ASSEMBLY
12	6		6	2		D3578-041	DOUBLER
2	2					D3610-041	BRACKET
2	2					D3618-1	CAP
4	4					AN4-10A	BOLT
2		2				AN4-16A	BOLT
4		4				AN4-25A	BOLT
4		4				AN4-27A	BOLT (DSI 9469)
2	2					AN4-44A	BOLT
2	2					MS24693S274	SCREW
3	3			1		MS24694S56	SCREW
10	2		8			MS24694S58	SCREW
1	1			1		MS24694S60	SCREW
26	6	20				AN960JD416	WASHER
4	4					AN960JD416L	WASHER
12	6	6				MS21042L4	NUT
24	12		12	4		CR3212-4-4	RIVET

CANADA
DEPARTMENT OF TRANSPORT
AIRCRAFT CERTIFICATION
BRANCH
DAO # 01-O-01

APPROVED

BY: _____
D. SHEPHERD (DE # 02)

DATE: 10.03.22
CERT. NO.: SH04-7
ISSUE NO.: 3

DESIGN	
DRAWN	
CHECKED	
MFG. APPR.	N/A
APPROVED	
DE APPR.	
DATE	10.03.18

DART AEROSPACE LTD
HAWKESBURY, ONTARIO, CANADA

DRAWING NO. DSI 9511 — REV. A — SHEET 5 OF 6

TITLE: NEW SHOULDER HARNESS KITS — SCALE: NTS

COPYRIGHT ©2010 BY DART AEROSPACE LTD
THIS DOCUMENT IS PRIVATE AND CONFIDENTIAL AND IS SUPPLIED ON THE EXPRESS CONDITION THAT IT IS NOT TO BE USED FOR ANY PURPOSE OR COPIED OR COMMUNICATED TO ANY OTHER PERSON WITHOUT WRITTEN PERMISSION FROM DART AEROSPACE LTD.

TABLE 3

QTY -337	QTY -353	Part Number	Description
X		D214-702-337	Dart 5-Man 3 Point Aft Facing Shoulder Harness Kit, for 214 Aircraft
	X	D205-702-353	Dart 4-Man 3 Point Aft Facing Shoulder Harness Kit, for UH-1 Aircraft
1	2	D412-702-311	HARNESS ASSEMBLY (NEW) --> SEE TABLE 2
1	2	D412-702-313	HARNESS ASSEMBLY (NEW) --> SEE TABLE 2
1		D412-702-321	HARNESS ASSEMBLY (NEW) --> SEE TABLE 2
1		D412-702-323	HARNESS ASSEMBLY (NEW) --> SEE TABLE 2
1		D412-702-319	HARNESS ASSEMBLY (NEW)
1*		D3925-041	BRACKET
1*		D4088-043	SHOULDER HARNESS ASSEMBLY (NEW)
4*		MS24694S50	BOLT
4*		AN960JD10L	WASHER
4*		MS21042L3	NUT
	1	D3572-043	GUIDE ASSY
	1	D3572-044	GUIDE ASSY
1		D3920-041	SEATBELT GUIDE ASSEMBLY
2		D3920-5	SEATBELT GUIDE
1	6	AN4-16A	BOLT
1		AN4-21A	BOLT
7		AN4-25A	BOLT
18	12	AN960JD416	WASHER
9	6	MS21042L4	NUT

* denotes that part is included in assembly above

CANADA
DEPARTMENT OF TRANSPORT
AIRCRAFT CERTIFICATION
BRANCH
DAO # 01-O-01

APPROVED

BY: _____
D. SHEPHERD (DE # 02)

DATE: 10.03.22
CERT. NO.: SH04-7
ISSUE NO.: 3

DESIGN		**DART AEROSPACE LTD** HAWKESBURY, ONTARIO, CANADA
DRAWN		
CHECKED		DRAWING NO. REV. A
MFG. APPR.	N/A	DSI 9511 SHEET 6 OF 6
APPROVED		TITLE SCALE
DE APPR.		NEW SHOULDER HARNESS KITS NTS
DATE	10.03.18	

COPYRIGHT © 2010 BY DART AEROSPACE LTD
THIS DOCUMENT IS PRIVATE AND CONFIDENTIAL AND IS SUPPLIED ON THE EXPRESS CONDITION THAT IT IS NOT TO BE USED FOR ANY PURPOSE OR COPIED OR COMMUNICATED TO ANY OTHER PERSON WITHOUT WRITTEN PERMISSION FROM DART AEROSPACE LTD.

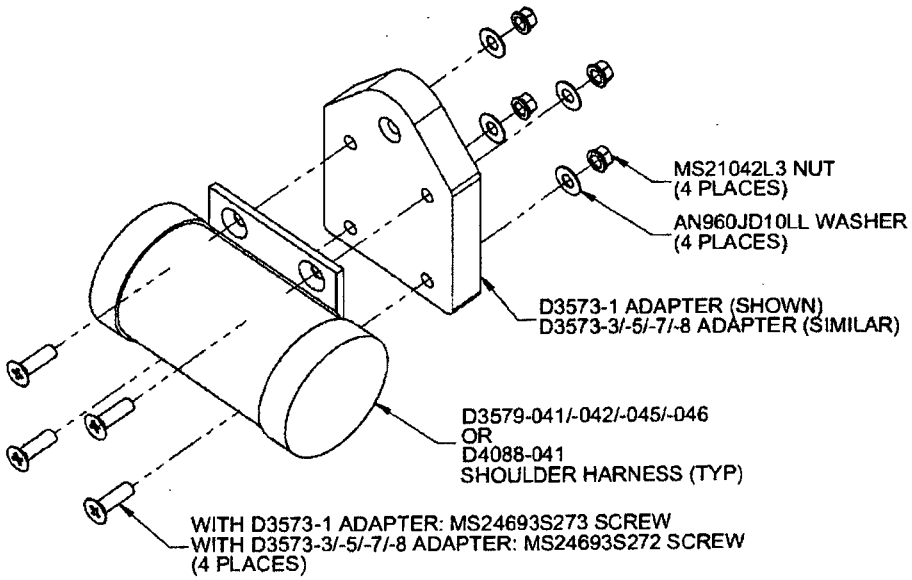

***DETAIL 'K'** D412-702-101A/-103A/-105A/-107A/-109A/-115A/-117A AND D412-702-101B/-103B/-105B/-107B/-109B/-115B/-117B OR -301/-303/-305/-307/-309/-315/-317 HARNESS ASSEMBLIES*

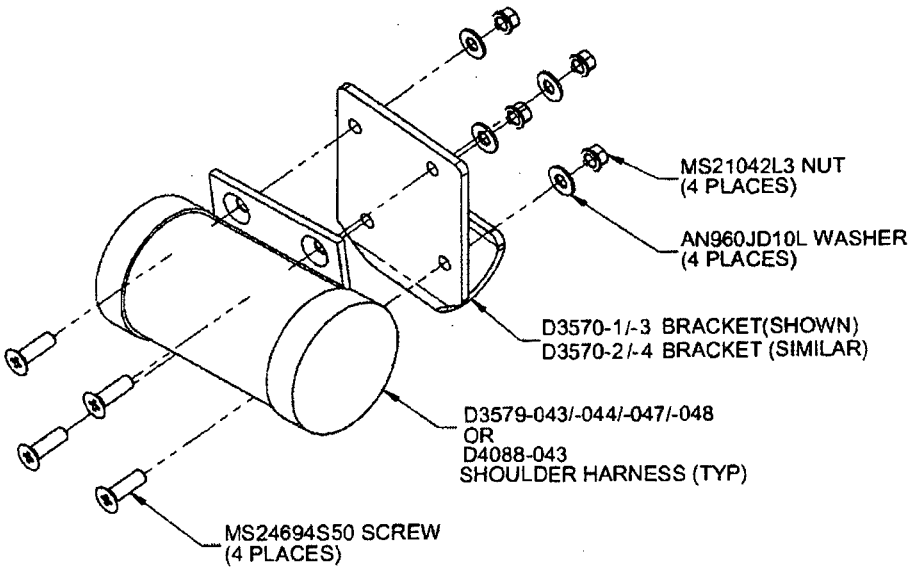

***DETAIL 'L'** D412-702-111A/-111B/-113A/-113B OR -311/-313/-321/-323 HARNESS ASSEMBLIES*

• COPYRIGHT © 2004 BY DART AEROSPACE LTD. •
THIS DOCUMENT IS PRIVATE AND CONFIDENTIAL AND IS SUPPLIED ON THE EXPRESS CONDITION THAT IT IS NOT TO BE USED FOR ANY PURPOSE OR COPIED OR COMMUNICATED TO ANY OTHER PERSON WITHOUT WRITTEN PERMISSION FROM DART AEROSPACE LTD.